Thermal and Transient Analysis of Heat Pipe Cooling in Drilling Applications

< Ramesh Ganuga Penta>[1], < Suresh Ganta >[2], < K.Balaji >[3],<M.Dorababu >[4]

[1]Assistant Professor,Vemu Institute of Technology,
Dept. of Mechanical Engineering
ganuga.ramesh303@gmail.com

[2] Assoc. Professor,Vemu Institute of Technology,
Dept. of Mechanical Engineering
gantasuresh.m.tech@gmail.com

[3] Assistant Professor,Vemu Institute of Technology,
Dept. of Mechanical Engineering
k.balaji449@gmail.com

[4] Assistant Professor,Vemu Institute of Technology,
Dept. of Mechanical Engineering
chaitanyadorababu@gmail.com

Abstract: The study is performed to analyze the feasibility, of using heat pipe cooling in drilling applications. The effect of different geometrical parameters expected for a heat pipe drill configuration such as depth of the heat pipe within the drill, heat pipe diameter, heat flux input magnitude and length of the heat input zone is considered. In this model, it is assumed that the drill is subjected to a static heat source which verifies the model and feasibility of using heat pipe cooling in drilling operations. The performance of the heat pipe drill model is approximated using a solid cylinder model of pure conduction.

Heat pipe is a simple device that can quickly transfer heat from one point to another. They are often referred to as the "superconductors" of heat as they possess an extra ordinary heat transfer capacity and rate with almost no heat loss.

To validate the results, 3D modeling of the twist drill without and with heat pipe was modeled. The heat flux is given to the surface of the twist drill tool tip and the maximum transient temperatures of twist drill (without and with heat pipe) are calculated. The results show that the use of heat pipe in a twist drill can reduce the temperature significantly.
Keywords: Hard turning, Minimal fluid application ,Pulsed jet, Heat pipe.

1. Introduction

The higher functions of cutting fluids are to reduce the friction between the cutting tool and work piece as well as aid in thermal management. They are also used for corrosion control, chip ejection, and washing. The use of cutting fluids is prevalent in most machining processes unless there is a strict incompatibility between the coolant and the work piece, or if the cutting insert is susceptible to thermal shock. The most common method of applying cutting fluids is flooding; others include jet impingement, mist cooling, etc. This exposes the working environment to fluids that may cause significant contamination to the environment and health hazards for the workers. The cutting fluids cause significant damage to the environment

Industries across the world are increasingly becoming aware of the environment. This has led them to turn towards a sustainable and environment friendly approach. This approach has been spearheaded by many organizations across the globe to spread awareness on preserving the environment and the resources for the future generations and not recklessly using up resources and destroying the quality of environment. In the drilling process, tool temperatures are particularly important because the chips, which absorb much of the cutting energy, are generated in a confined space and remain in contact with the tool for a relatively long time as compared with other machining operations. As a result, drill temperatures are much higher than in other processes under similar conditions. An effective cooling method, other than flooding by a coolant, is desirable to decrease drill tool temperatures.

HEAT PIPE

A heat pipe is a heat transfer mechanism that can transport large quantities of heat with a very small difference in temperature between the hot ends to the other end. In other words, it is a simple device that can quickly transfer heat from one point to another. They are often referred to as the "superconductors" of heat as they possess an extra ordinary heat transfer capacity and rate with almost no heat loss.

The external heat load on the evaporator section causes the working fluid to vapourize. The resulting vapour pressure drives the vapour through the adiabatic section to the condenser section, where the vapour condenses, releasing its latent heat of vapourization to the provided heat sink. The condensed working fluid is then pumped back by capillary pressure generated by the meniscus in the wick structure. Transport of heat can be continuous as long as there is enough heat input to the evaporator section such that sufficient capillary pressure is generated to drive the condensed liquid back to the evaporator. In some cases, such as a home heating system, gravity is used to return the condensed liquid to the evaporator instead of the wick

structure. Heat transfer in the liquid-wick region is pure conduction, and that a steady state solution can be established.

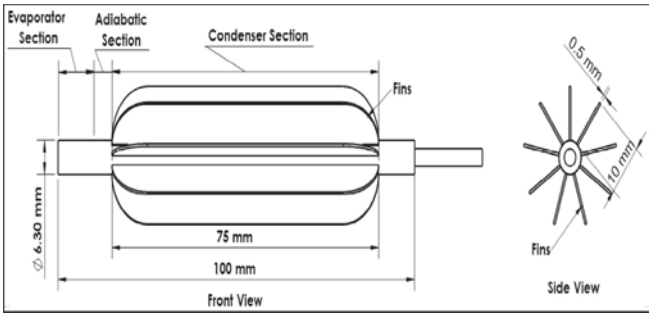

Fig.1 Heat Pipe

DRILLING PROCESS

Machining operations such as turning, grinding, boring, milling and drilling are used to manufacture a diversity of mechanical products in industry. Drilling is one of the most important machining processes that have been widely applied in manufacturing area.

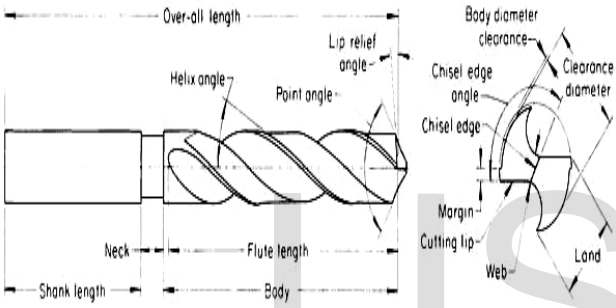

Fig.2.Drill Tool

Tools for making, enlarging, finishing, and threading holes are marked by the common feature that these tools operate in closed profile of hole. This imposes limitations on size.

2. LITERATURE REVIEW

Heat pipe is a heat transfer device with a very high thermal conductance.It is used to transport heat from one location to another without the need for an external power supply by diffusion. **Noorul Hag et al.** [1] investigated the effect of parameters such as diameter of heat pipe, length of heat pipe, magnitude of vacuum in the heat pipe and the material used for making heat pipe on cutting performance. Heat transfer efficiency of heat pipe during hard turning of engine crank pin material using mixed alumina insert was studied. A set of heat pipe parameters for optimum performance were arrived at by performing a nine run experiment. There was considerable improvement in tool life when a 400 mm Hgvacuum was maintained in a heat pipe made of brass having length 40 mm and diameter 7 mm was used.

Liang et al. [2] studied the effect of heat pipe in reducing the tool–chip interface temperature of the cutter with a flat heat pipe attached on the rake face of insert in dry turning. The results showed that the tool–chip interface temperature could be reduced effectively for the cutter with heat pipe cooling and the reduction in temperature is found to be more at the higher cutting speed. **Zhu et al.** [3] made a numerical study in order to investigate the effect of heat pipe cooling in drilling operations by predicting the thermal, structural static and dynamic characteristics of the tool. The numerical simulation indicated that heat pipe assisted drilling reduced the peak temperature and stress on the tool tip when compared to dry drilling. **Liang et al.** [4] estimated the amount of heat flowed into the turning tool and that carried away by the heat pipe. It is found that the presence of heat pipe increased the amount of heat flowing in to the tool and also increased the amount of heat dissipation from the tool which helped in reducing of temperature at tool chip interface. **Matthew Boone.et al.** [5]The temperature profile along the cutting edges of a drill and provides a theoretical explanation for the fact that the maximum temperature can occur near the chisel edge. Analytical equations are developed to calculate the heat flux loads applied to a finite element model of the drill. In this study, the results predicted by the model are consistent with experimental observations, in which the temperature near the chisel edge is larger than on the primary cutting edges. Numerical results from the proposed model are verified by the experimental data. **Mohammad Gholamhossein Pour et al.** [6] Results indicate the significant effect of using a nano fluid in heat pipe drilling in temperature field reduction. Also, results propose applicable criteria in manufacturing nano fluid heat pipe in drilling. In this work, the influence of nano 2 3 *Al O* fluid in heat pipe cooling system is studied in drilling work. Also, an experimental drill without heat pipe is manufactured and is modeled theoretically to compare the temperature distribution with one is obtained in heat pipe cooling drilling. **Christopher E / Heuer et al.** [7] the information presented here should give a good appreciation of the quality and complexity of the heat pipe design. The information should also be useful in developing heat pipes for use in other cold regions applications. **Siller Anton/ Stein inger Andreas et al.** [8] This paper shows the experimental setup and the test results of an internal cooled tool holder and cutting insert. This includes the temperatures between deactivated and activated internal cooling and the wear of the cutting insert. **Investigation of the effect of drilling conditions on the twist drill temperature during step-by-step and continuous dry drilling;- Eyup Bag ci.et al.** [9] **,**The drill bit temperature distributions measured by the thermocouple for twist drills method are presented experimentally during step-by-step and continuous dry drilling operation. In the drilling processes, cutting conditions have different spindle speed, drilling depth and feed rate are used. Drill temperatures are measured by inserting standard thermocouples through the **Page 980** coolant (oil) hole of TiAlN-coated carbide drills. Experimental study was conducted by using two different work piece materials, AISI 1040 steel and Al 7075- T651 alloy materials.

Review of literatures indicated that cutting performance can be improved by introducing heat pipes for removal of heat from the cutting tools. Heat pipe assisted cooling system can reduce or eliminate the use of cutting fluids and the associated environmental pollution. Moreover, the above literature clearly revealed that no study has been made related to the application of heat pipe in the area of machining with minimal fluid application.

in the present research work, To validate the results, 3D modeling of the twist drill without and with heat pipe was modeled. The heat flux is given to the surface of the twist

drill tool tip and the maximum transient temperatures of twist drill (without and with heat pipe) are calculated. The results show that the use of heat pipe in a twist drill can reduce the temperature significantly.

3. FINITE ELEMENT MODEL OF THE DRILL

This study analyzes the case in which a high-speed steel drill of diameter 9.92 mm machines a hole in a work piece of aluminum 319. The temperature distribution in the drill is calculated using a finite element analysis created with the commercial finite element code ABAQUS Standard. A three-dimensional finite element model of the drill consisting of eight-node diffusive heat transfer elements of type DC3D8 is illustrated in Figure.3. The model is identical to the drills used in the experiments. The heat that enters the drill is modeled by applying heat flux to the elements on the chisel edge and primary cutting edges of the drill. All other surfaces of the model are adiabatic.

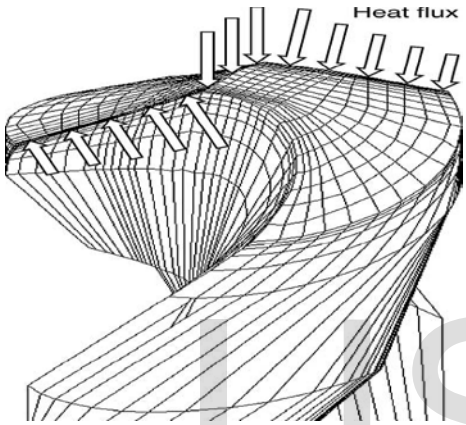

Fig. 3 Finite element models of the drill and heat flux loads

3.1. FINITE ELEMENT METHODS

The finite element method is numerical analysis technique for obtaining approximate solutions to a wide variety of engineering problems. Because of its diversity and flexibility as an analysis tool, it is receiving much attention in engineering schools and industries. The fundamental areas that have to be learned for working capability of finite element method include. Matrix Algebra, Solid Mechanics, Variation Methods, Computer Skills.

3.2. GENERAL DESCRIPTION OF FEM

In the finite element method, the actual continuum of body of matter like solid, liquid or gas is represented as an assemblage of sub divisions called Finite elements. These elements are considered to be inter connected at specified points known as nodes or nodal points. These nodes usually lie on the element boundaries where an adjacent element is considered to be connected. Since the actual variation of the field variables (like Displacement,stress,temperature,pressure and velocity) inside the continuum are is not know, we assume that the variation of the field variable inside a finite element can be approximated by a simple function. These approximating functions (also called interpolation models) are defined in terms of the values at the nodes. When the field equations (like equilibrium equations) for the whole continuum are written, the new unknown will be the nodal values of the field variable. By solving the field equations, which are generally in the form of the matrix equations, the nodal values of the field variables will be known. Once these are known, the approximating function defines the field variable throughout the assemblage of elements.

LIMITATION:

One limitation of finite element method is that a few complex phenomenons are not accommodated adequately by the method as its current state of development. Some examples of such phenomenon form the realm of solid mechanics are cracking and fracture behavior, contact problems, bond failures of composite materials, and non-linear material behavior with work softening. Another example is transient, unconfined seepage problems. The numerical solution of propagation or transient problem is not satisfactory in all respects. Many of these phenomenon's are presently under research and refinements of the methods to accommodate these problems better can be expected

4. MODELING AND MESHING

Catia modeling;- The setup is modeled using the CATIA V5 R20 modeling package – Then CATIA modeling is converted to STEP file (stp) format processing by the solver package.

5. MODELLING OF TWIST DRILL WITHOUT HEAT PIPE

Dimensions of twist drill:

- Total length = 268 mm
- Flat tang (breath) = 18.2 mm
- Flat tang (width) = 7.8 mm
- Shank length = 81mm
- Shank small diameter = 20.1 mm
- Shank large diameter = 23.6 mm
- Cut shank length = 18 mm
- Cut shank diameter = 23.1 mm
- Flute length = 154.6 mm
- Drill diameter = 25.4mm

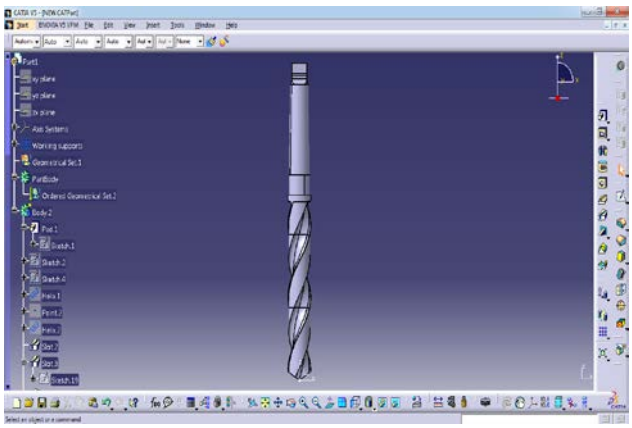

fig.4. Modeling of Twist Drill without Heat Pipe

6. MODELLING OF TWIST DRILL WITH HEAT PIPE

Dimensioning of the heat pipe

Diameter of heat pipe = 6.35 mm
Length of the heat pipe = 236.6 mm
Clearance of tip and heat pipe = 25.4 mm

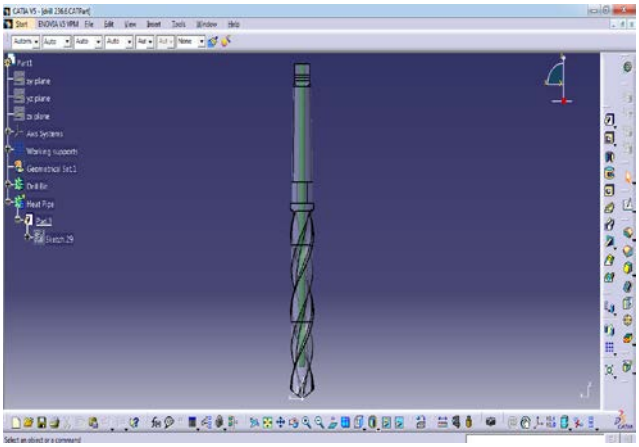

Fig.6. Modeling of Twist Drill with Heat Pipe

The heat pipe models are made by the slot cut from back of the flat tangup to clearance of tool tip.

7. MESHING

Meshing is done by using ANSYS Workbench 12.0. ANSYS used tetrahedrons method with smoothing medium. The nodes and elements as varied based on with and without heat pipe of twist drill model. By Comparison of the different models, with heat pipe has more number of nodes and elements.

TWIST DRILL WITHOUT HEAT PIPE

Relevance : 100
Nodes : 24814
Elements : 15244

TWIST DRILL WITH HEAT PIPE

Relevance : 100
Nodes : 27173
Elements : 15928

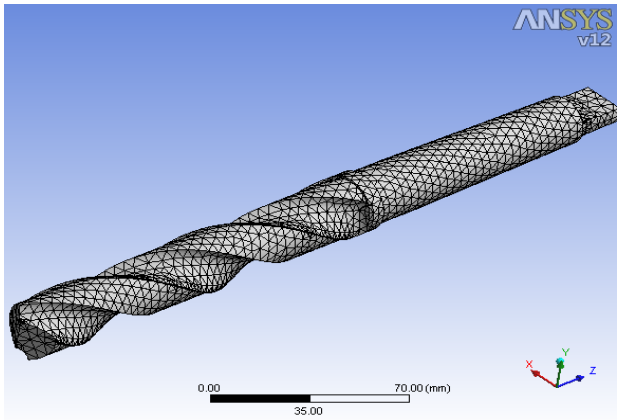

Fig.7. MESHING OF WITHOUT HEAT PIPE

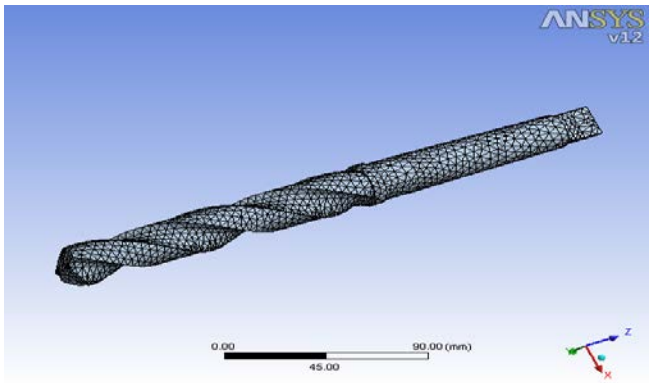

Fig.8. MESHING OF WITH HEAT PIPE

8. ANALYSIS OF TWIST DRILL WITH AND WITHOUT HEAT PIPE

8.1. TRANSIENT THERMAL ANALYSIS

The transient thermal analysis was based on the following common assumption

- Heat flow inside or outside the system.
- Rate of change of temperature with time, and
- Rate of change of energy within the system.

8.2. MATERIAL PROPERTIES

Table. 1 Material Properties

Component	Material	Density(ρ) kg/m^3	Specific heat capacity (C_P) J/kg-k	Thermal conductivity (k) W/m-k
Heat pipe	COTS	932	4187	10000
Twist drill tool	HSS	7850	460	40

8.3. BOUNDARY CONDITIONS

The Heat flux load and Initial temperature elements are the two main factors for the boundary conditions.

8.4. HEAT FLUX LOAD CONDITION

Heat flux load is applied on the tool tip of the face elements. Five values of heat flux load is given to tool tip surfaces for finding temperature with and without of heat pipe of twist drill.

Table. 2 Heat Flux Load Sample Conditions

S.No	Heat Flux Load (W/mm^2)
1.	0.33
2.	0.50
3.	0.60
4.	0.80
5.	1

8.5. TEMPERATURE CONSTRAINTS

The ambient temperature and the initial temperature of the setup were fixed at 30°C. The radiant ambient temperatures were also fixed at 30°C.

8.6. APPLYING HEAT FLUX LOAD

For transient thermal analysis, heat flux load will be applied in the tool tip of the surfaces.

- Heat flux load is given on the Z axis.
- All the other side is kept as a default value.
- Five different values of heat flux load are given as an input for with and without heat pipe and transient temperature analysis is performed to check the temperature.

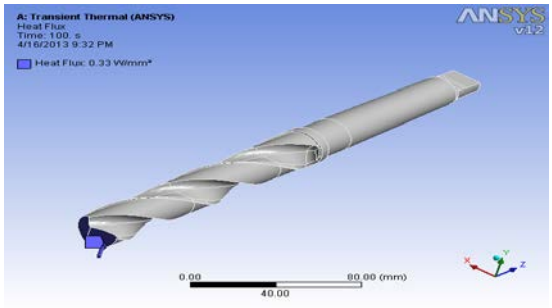

Fig.9. Heat flux Load on Twist Drill

9. TEMPERATURE DISTRIBUTION AT0.33 W/mm^2 HEAT FLUX

WITHOUT HEAT PIPE	WITH HEAT PIPE
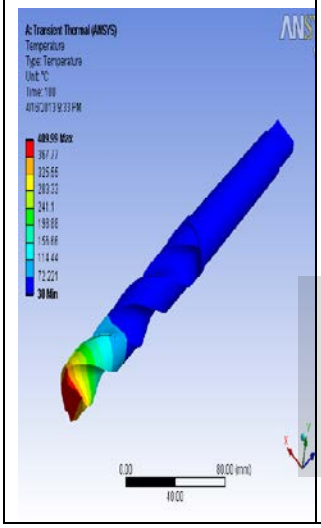	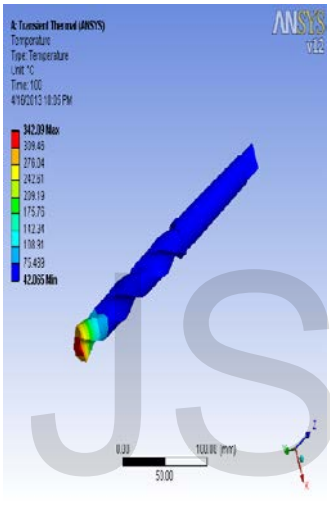

Fig.10. Transient Thermal Analysis at 0.33 W/mm^2 heat flux

Initially the temperature distribution condition is 30°c and time end value is set as 100 sec. The Transient temperature of the twist drill WITHOUT HEAT PIPE is409°c and WITH HEAT PIPE is 342°c. So the minimum temperature is obtained from with heat pipe condition at the specified (0.33 W/mm^2) heat flux load. The temperature difference between without and with heat pipe is 67°c.

10. RESULTS & DISCUSSION

TRANSIENT AND THERMAL ANALYSIS RESULTS

1. Five different types of heat flux load are given and the transient temperature is found out (without and with heat pipe) in twist drill.

2. For a comparison of without and with heat pipe of twist drill, graph has been plotted considering Time as X axis and Temperature as Y axis.

3. The below graphs and tables are showing the results of without and with heat pipe in twist drill.

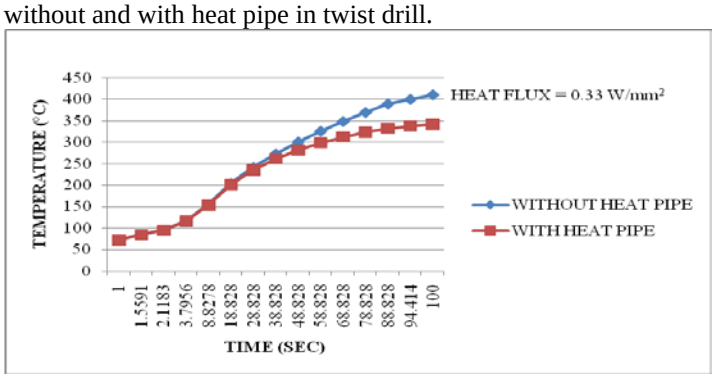

Fig.11. Temperature vs Time for Heat Flux Load 0.33W/mm^2

S.NO	Heat flux, W/mm^2	Temp without heat pipe (°C)	Temp with heat pipe (°C)	Temperature difference (°C)
1.	0.33	409	342	67
2.	0.50	605	504	101
3.	0.60	720	598	122
4.	0.80	951	788	163
5.	1	1181	978	203

Table.3 discussion of the results.

CONCLUSION

In this study the transient thermal analysis is carried out by different heat flux loads in twist drill. The inserted heat pipe in a twist drill has a significant effect on the temperature drop at the drill tip surface. Transient thermal analysis shows that the use of a heat pipe inside the drill reduces the temperature field significantly. By the results it is concluded that with heat pipe modification on twist drill application, more cooling take place which reduces the twist drill temperature simultaneously.

FUTURE WORK

The results of this study have provided valuable preliminary information on the heat pipe cooling in drilling operations. Based on this analysis, several drills can be designed & manufactured to get the actual results on the physical application. In addition, further analysis of the heat pipe concept, particularly under the effect of rotation, is necessary

REFERENCES

[1]. A. Noorul Haq, T. Tamizharasan, Investigation of the effects of cooling
in hard turning operations, Int. J. Adv. Manuf. Technol. 30 (2006) 808–
816.
[2]. L. Liang, Y. Quan, Z. Ke, Investigation of tool-chip interface temperature in dry
turning assisted by heat pipe cooling, Int. J. Adv. Manuf. Technol. 54 (2011)
35–43.
[3]. L. Zhu, T.C. Jen, C.L. Yin, X.L. Kong, Y.H. Yen, Investigation of the feasibility and
effectiveness in using heat pipe-embedded drills by finite element analysis, Int.
J. Adv. Manuf. Technol. 64 (2013) 659–668.
[4]. L. Liang, Y. Quan, Investigation of heat partition in dry turning
assisted by heat pipe cooling, Int. J. Adv. Manuf. Technol. 66 (2013) 1931–1941.
[4]. Matthew Boone, Jun Nib "The location of the maximum temperature on the cutting edges of a drill" Journal of machine machine tools and manufacture, 46, 901-907, 2006.
[5]. Mohammad Gholamhossein Pour*, Ehsan Ghaedi Experimental Investigation of Performance of Heat Pipe for Drilling Purposes International Journal of Materials Chemistry and Physics Vol. 1, No. 3, 2015, pp. 343-346 http://www.aiscience.org/journal/ijmcp
[6]. Christopher E / Heuer the application of heat pipes on the trans-alaska pipe line
[7]. Siller Anton*, Steininger Andreas, Bleicher Friedrich Heat Dissipation in Turning Operations by Means of Internal Cooling ScienceDirect
[8]. EyupBag ci, Babur Ozcelik, "Investigation of the effect of drilling conditions on the twist drill temperature during step-by-step and continuous dry drilling" journal of Materials and Design, 27, 446–454, 2006.
[9]. Elenz A.: Innovationen in der Werkzeugtechnik – Intelligente Kühlschmierstoffe; Industrie 4.0 – Die intelligente Fabrik der Zukunft (2014)
[10]. Klocke F., König, W.: Fertigungsverfahren 2. Schleifen, Honen, Läppen. 4.; Springer; 2005.
[11]. Schestag, R.: Aufwand und Kosten aus dem Kühlschmierstoff-Einsatz; Ministerium für Umwelt, Klima und Energiewirtschaft Baden-Württemberg; 2012.
[12]. A.S. Varadarajan, B. Ramamoorthy, P.K. Philip, Formulation of a cutting fluid for hard turning with minimal cutting fluid, 20th AIMTDR Conference, Birla Institute of Technology, Ranchi, India, 201–205, 2002.
[13]. P. Sam Paul, A.S. Varadarajan, R. Robinson Gnanadurai, Study on the influence of fluid application parameters on tool vibration and cutting performance during turning of hardened steel, Eng. Sci. Technol. Int. J. 19 (1) (2015) 241–253, doi:10.1016/j.jestch.2015.07.017.

[14]. F.B. Nishida, L.S. Marquardt, V.Y.S. Borges, P.H.D. Santos, T.A. Alves, Development of a copper heat pipe with axial grooves manufactured using wire electrical discharge machining (Wire-EDM), Adv. Mater. Res. 1120–1121 (2015) 1325–1329.
[15]. R.H. Lochner, J.E. Matar, Designing for Quality, Chapman and Hall, London, 1990.
[16]. A.S. Varadarajan, P.K. Philip, T. Sundararajan, Extrapolative Prediction of Cutting Temperature Using Finite Element Method, 19th AIMTDR Conference, Chennai,
India, 2000, pp. 407–412. ISBN: 8173193983.
[17]. T.C.Jen et al,"Investigation of heat pipe cooling in drilling applications.Part I: preliminary numerical analysis and verification"Journal of Machine Tools & Manufacture, 42, 643–652, 2002.
[18]. D.A. Reay David Reay & Associates, Whitley Bay, UK P.A. Kew, "Heat Pipes Theory, Design And Application",Fifth Edition.
[19]. Incropera, DeWitt, Bergman and Lavine, "Fundamentals Of Heat And Mass Transfer, 6thEdison, Elsevier,377 P.